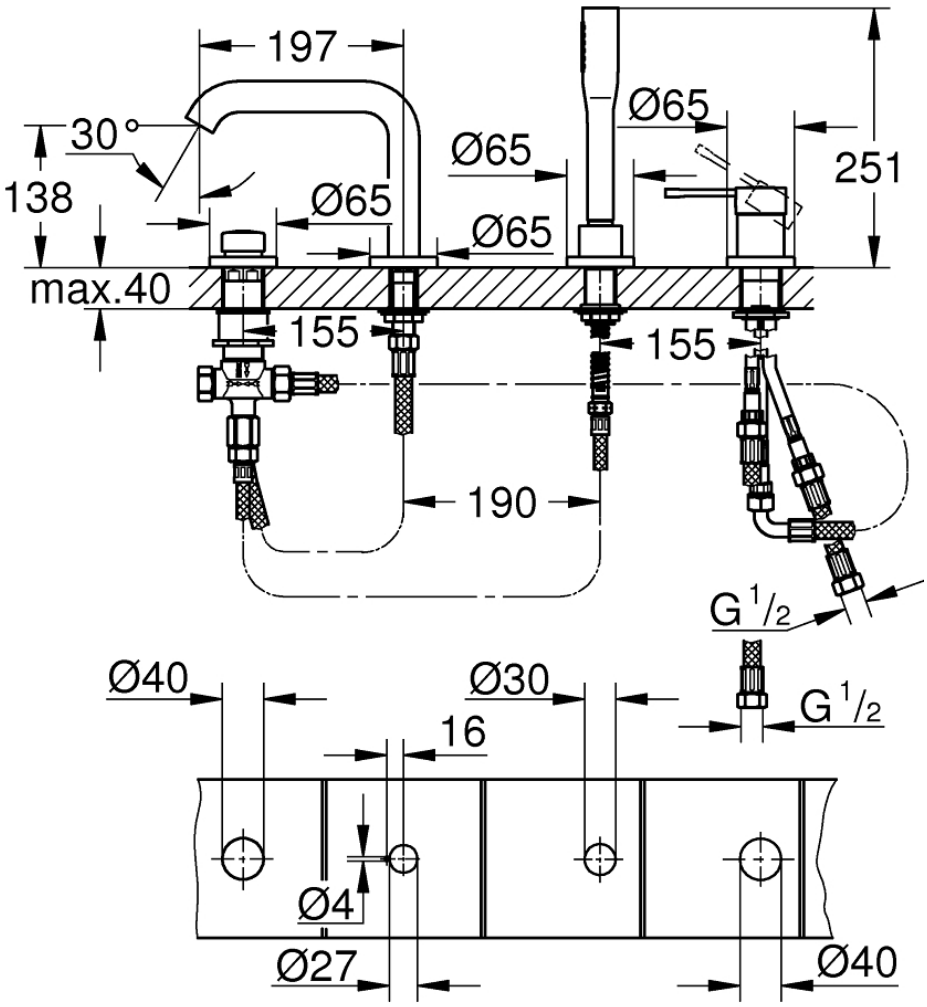4 Hole Single Lever Bath Combination