DURAVIT

Toilet wall mounted # 2533090000 |< 375 mm >|

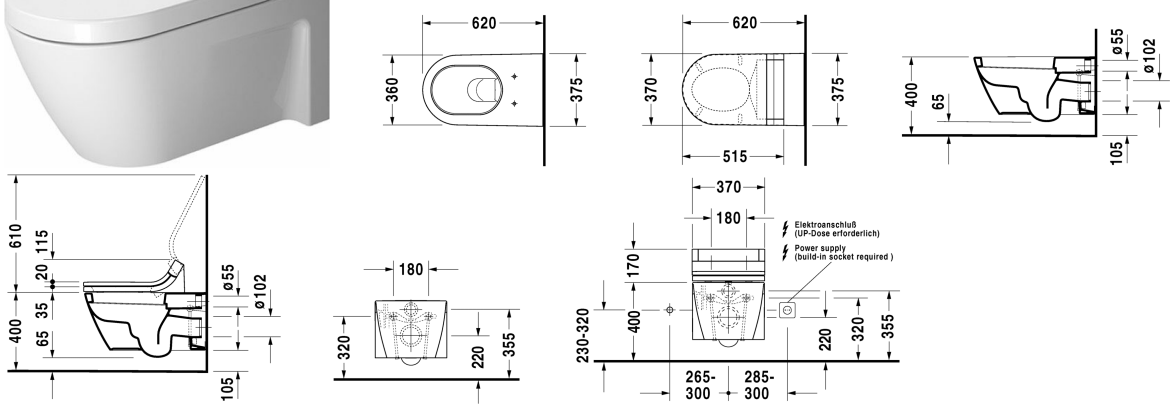

Toilet wall mounted	Dimension	Weight	Order number
washdown model, Durafix included, EWL class 1			
Colors			
00 White Alpin			
Variant			
©4,5 litre flush	375 x 620 mm	29.000 kg	2533090000
Infobox			
Durafix for invisible fixation is included in delivery, For Starck 2 WCs, constructed before February 2012, the toilet seats without soft closure # 0066910000 and with soft closure # 0066990000 are suitable			
Sanitary ceramics with the special WonderGliss surface finish will remain clean and attractive-looking for a long time to come. When ordering WonderGliss please add a "1" as eleventh digit to the model number.			
Accessory for ceramics			
Fixing for wall mounted bidet and wall mounted toilet	Ø 12 x 180 mm	0.200 kg	006500
Accessory			
Noise reduction gasket for wall mounted toilet		0.300 kg	005064
Suitable products			
Toilet seat and cover elongated, hinges stainless steel, without automatic closure,			006332
Toilet seat and cover elongated, hinges stainless steel, removable, with automatic closure,			006339