Burlington®
Yesterday's designs TODAY'S TECHNOLOGY

Simply Exlusive
Classically styled bathrooms

Regal close-coupled pan with standard lever cistern

C1 Close coupled/low level cistern 51cm ceramic lever (incl.cistern fittings)
P12 Regal close coupled pan

Technical Specification
Size: 480 x 660 x 845 mm
Finishes : White
Product Type : Traditional
Material : Vitreous China
Weight : 39.5 kg
Overall Height : 84.5cm

Additional information
Inlet Position Inlet is located on the base of cistern tank on the right side

Compliance/Approvals:
BS EN 997:2012
WC pans and WC suites with integral trap
BS EN 33:2011
Pedestal W.C. pans with close-coupled flushing cistern. Connecting dimensions

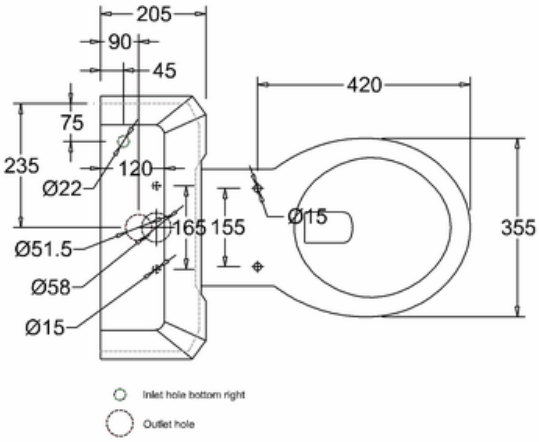

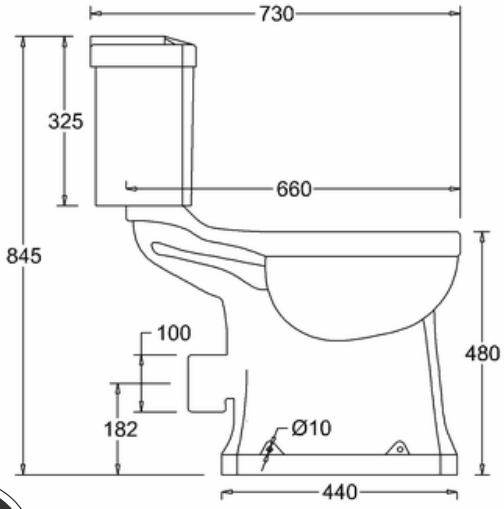

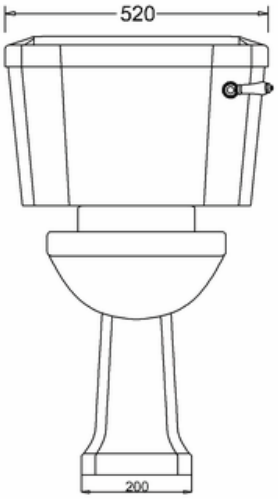

25 year guarantee

Luxury Bathroom Solutions