Burlington®

Simply Exclusive
Classically styled bathrooms

London Back To Wall Bath with Curved Surround incl overflow & waste - Dark Olive

E23O London Back To Wall Bath (Dark Olive panel) & waste.

Barcode: E23O (5055806018075)

Technical Specification

Code : E23O

Finishes : Dark Olive

Product Type : Traditional

Material : Inner bath: Lucite / CG; Surround: HDP Polymer

Additional information

Supplied with overflow and fitted waste.
Supplied with no tap holes, but these can be drilled into the furniture surround where appropriate.

Compliance/Approvals:

BS EN14516:2006; Baths for domestic purposes

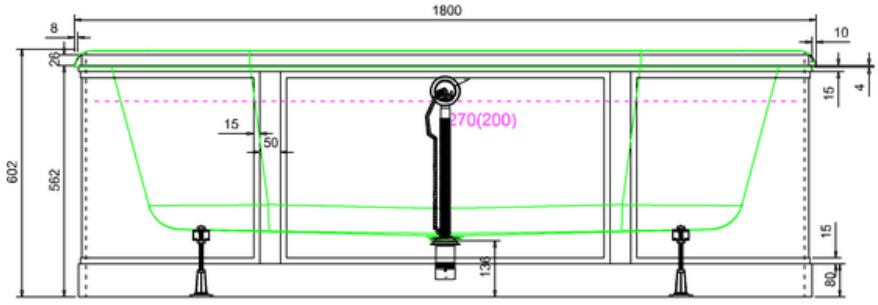

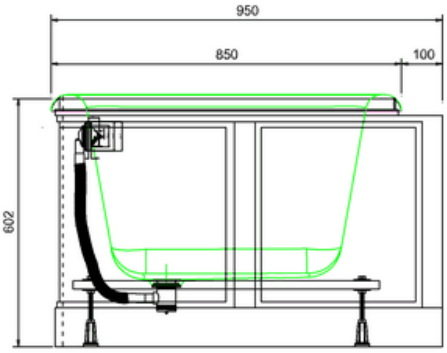

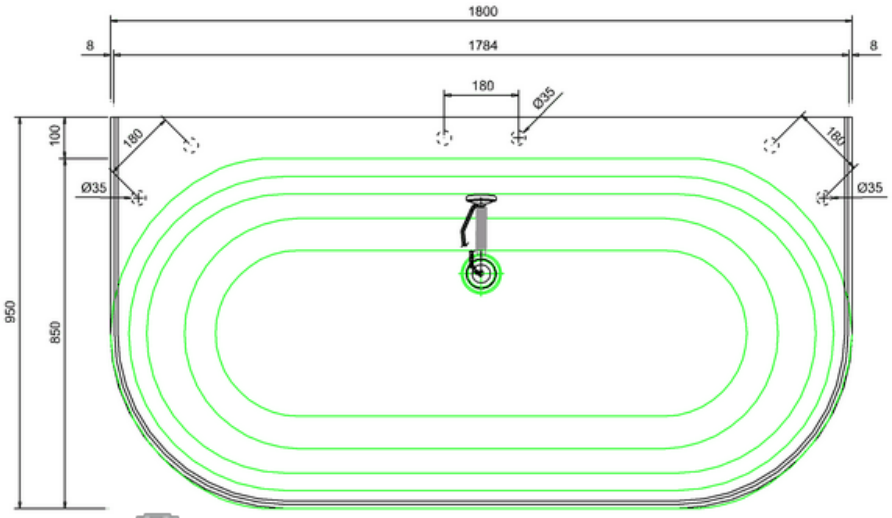

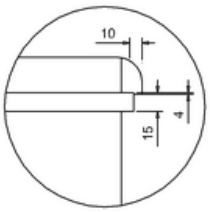

10 YEAR GUARANTEE

Luxury Bathroom Solutions