S50

Description: Reduced Depth Square Basin
Tap Holes: 1 Tap Hole & Overflow
Weight (kg): 14
Material: Vitreous China

Technical Drawing

1.

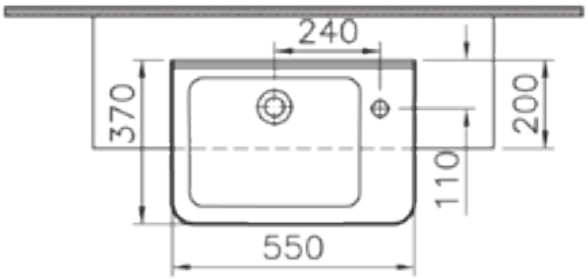

2.

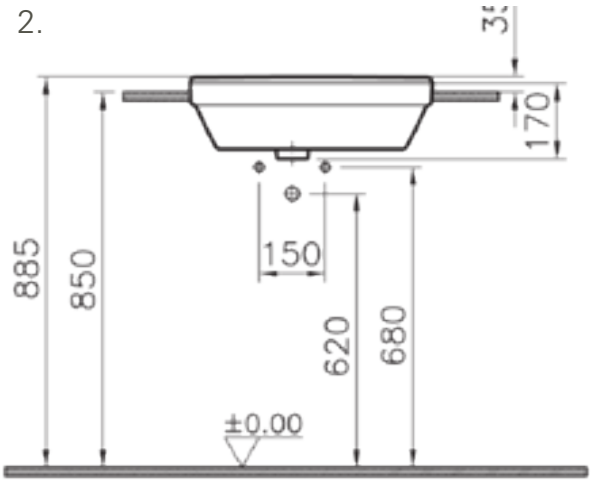

*We reserve the right to make technical modifications and alter colours without prior notice.